THK

Technical Reference

Smooth Silent Ecological

Accessories for Long-Term, Maintenance-Free Operation

Optimum Lubrication and Dust Prevention Options for Various Applications

For details, visit THK at **www.thk.com**

*Product information is updated regularly on the THK website.

THK CO., LTD.
TOKYO, JAPAN

CATALOG No.269-6E

Accommodation of Long-Term, Maintenance-Free Operation

Introduction to Accessory Lineup

1 Lubrication Accessories for Long-Term, Maintenance-Free

	LM Guide Lubricator QZ	Ball Screw Lubricator QZ
Purpose	The QZ Lubricator is installed on both ends of an LM block or ball screw nut. It supplies optimal amounts of lubricating oil to ball raceway to form an oil film between the balls and raceway for the realization of long-term, maintenance-free operation.	
Sketch Drawings	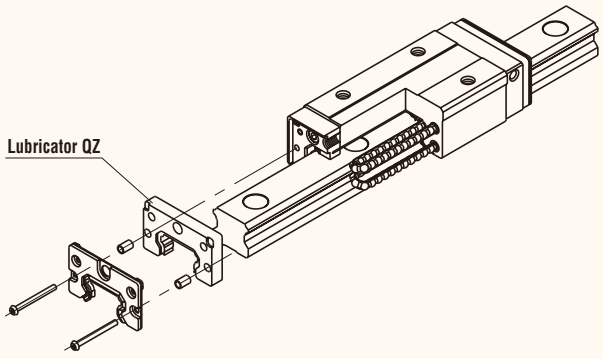	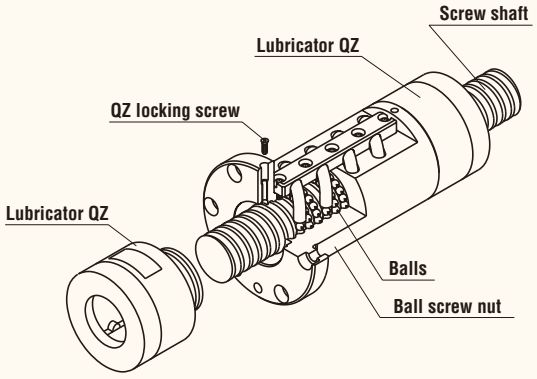
Structural Diagrams	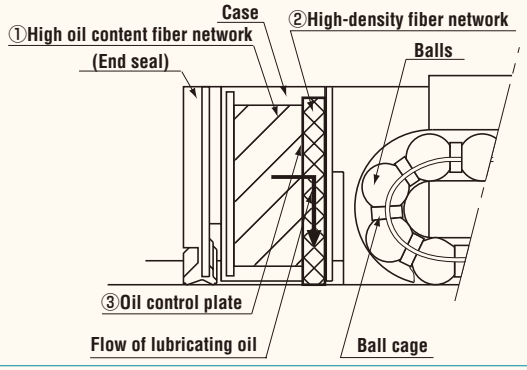	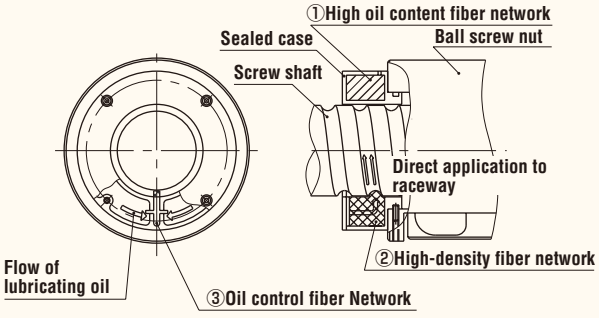
Principle	The structure is composed of three major components consisting of a ① high oil content fiber network (which functions to store lubricating oil), ② high-density fiber network (which functions to apply lubricating oil to the surface of the rolling grooves), and ③ oil control plate, fiber network (which functions to control the flow of lubricating oil). Application of lubricating oil by the Lubricator QZ is based on the principle of capillary action that is used in felt-tip pens and other products.	
Features	* Lubrication maintenance intervals can be significantly extended by compensating for lubricating oil loss during the course of operation. * Application of only the optimal amount of lubricating oil required for lubrication onto the surface of the rolling grooves prevents contamination of surroundings resulting in an environmentally-friendly system. * Enables selection of lubricating oil to match the particular application.	

In addition to longer service life, faster operation and lower noise levels, machine tools, liquid crystal and semiconductor production systems, automated machinery, health care equipment and a wide range of other devices have recently been required to also respond to needs relating to environmental protection and conservation of resources. THK engaged in product development that is based on the concepts of environmental protection, energy conservation and long service life, and offers a vast lineup of Accessories that make it possible to realize long-term, maintenance-free operation even under harsh environmental conditions.

2 Dust Prevention Accessories for Long-Term, Maintenance-Free Operation

	LM Guide Laminated Contact Scraper LaCS	Ball Screw Wiper Ring W
Purpose	LaCS are installed on both ends of an LM block to prevent entry of contamination particles.	Wiper rings are installed on both ends of a ball screw nut to prevent entry of contamination particles.
Sketch Drawings	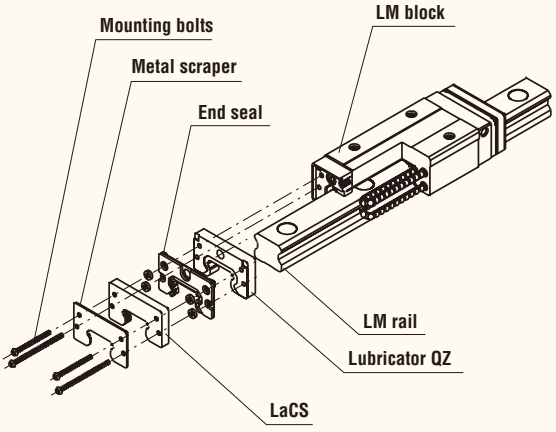	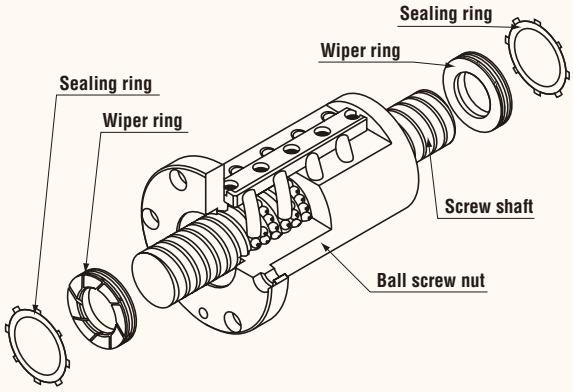
Structural Diagrams	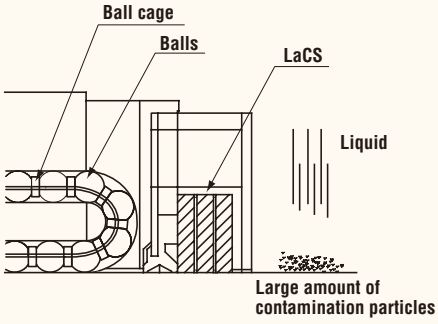	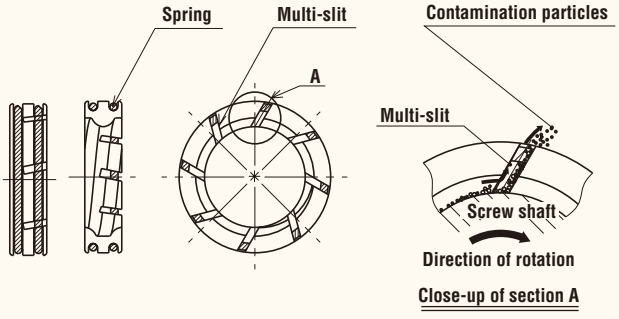
Principle	Contamination particles are removed in multiple stages using a laminated contact structure (3-layer scraper).	As a result of the wiper ring employing a structure in which it is brought into surface contact with the outer diameter of the ball screw shaft by a spring, foreign matter on the surface of the ball screw shaft is removed through slits at eight locations in the wiper ring by rotation of the ball screw.
Features	* A three-layer scraper makes contact over the entire surface of the LM rail resulting in excellent foreign matter removal capabilities. * The use of oil-impregnated synthetic foam rubber having a self-lubrication function realizes low friction resistance.	* Contamination particles are successively removed with 8 slits located around the wiper ring to prevent entry of contamination particles. * Contact with the ball screw inhibits leakage of grease. * Heat generation is held to a minimum due to the wiper ring being held in contact with the shaft at a constant pressure by a spring. * The use of materials having excellent wear and chemical resistance results in low levels of performance deterioration even after long-term use.

Accessories for Use in Normal Environments

Normal environment

Long-term, maintenance-free operation

LM Guide + Lubricator QZ

Applicable types: *HSR* *NR/NRS*

Caged Ball LM Guide

Applicable types: *SHS* *SVR/SVS* *SSR* *SHW* *SRS*

Caged Roller LM Guide

Applicable types: *SRG* *SRN*

Caged Ball LM Guide + Lubricator QZ

Applicable types: *SHS* *SVR/SVS* *SSR* *SHW* *SRS*

Caged Roller LM Guide

Applicable types: *SRG* *SRN* *SRW*

Ball Screw + Lubricator QZ

Applicable types: *BNFN* *BIF* *DK* *BNF* *DIK* *BTK*

High-Speed Caged Ball Screw (DN value up to 160,000 : SBK)

Applicable types: *SBN* *SBK* *SBKN* *SDA* *HBN* *SBKH*

High-Speed Caged Ball Screw + Lubricator QZ (DN value up to 160,000 : SBK)

Applicable types: *SBN* *SBK* *SBKN* *SDA*

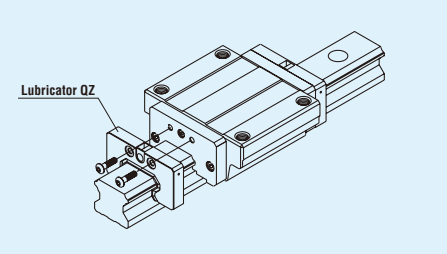

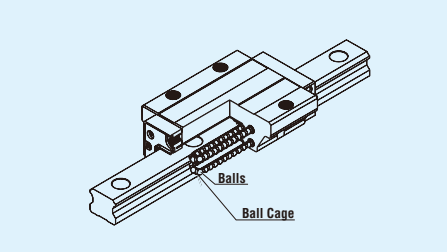

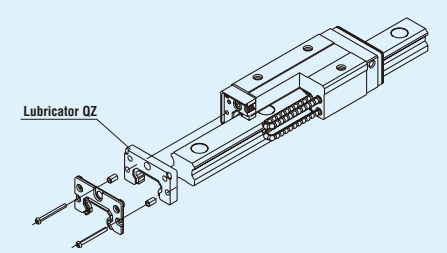

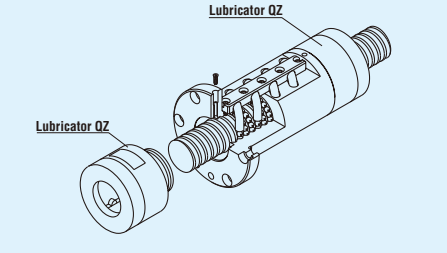

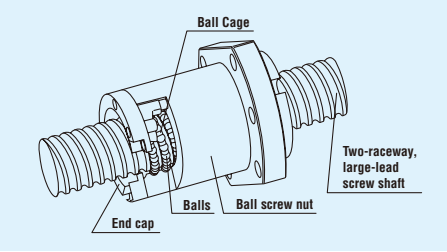

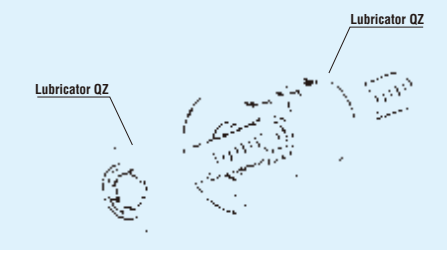

Application 1 When Using a Conventional Full Ball Type

Installing the Lubricator QZ on a full ball type realizes long-term, maintenance-free operation.

General industrial machinery
Health care equipment
Transport systems
General-purpose machine tools

Application 2 When Making Ecological Accommodations

Use of a caged ball type realizes long-term, maintenance-free operation.

General industrial machinery
Injection molding machines
Electrical discharge machines
Liquid crystal and semiconductor production systems
Three-dimensional measuring instruments
Precision optical stages

Application 3 When operating at high speed and consuming large amounts of lubricating oil

Installing the Lubricator QZ on a Caged ball type makes it possible to compensate for oil loss.

High-speed chip mounters
Injection molding machines
Various types of high-speed transport systems
High-speed robots
High-speed, general-purpose machine tools

Accessories for Use in Harsh Environments

Harsh environment

Wood chips, metal cuttings, coolant, metal cuttings + coolant

Caged Ball LM Guide
+ Metal Scraper
+ Laminated Contact Scraper LaCS
+ Lubricator QZ

Applicable types: ***SHS SVR/SVS SSR SHW***

Ball Screw + Lubricator QZ
+ Wiper Ring W

Applicable types: ***BNFN BIF DK BNF DIK BTK***

Caged Roller LM Guide
+ Metal Scraper
+ Laminated Contact Scraper LaCS
+ Lubricator QZ

Applicable types: ***SRG SRN SRW***

High-Speed Caged Ball Screw
+ Wiper Ring W
+ Lubricator QZ
(DN value up to 160,000 : SBK)

Applicable types: ***SBN SBK SBKN SDA***

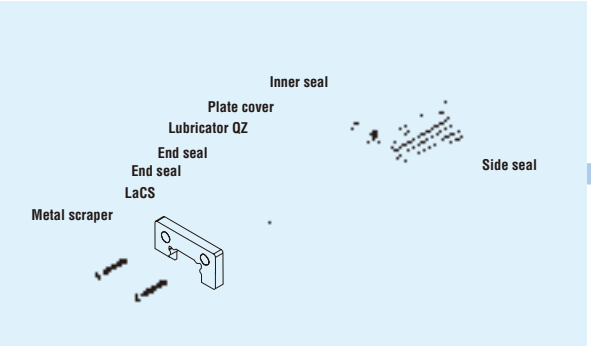

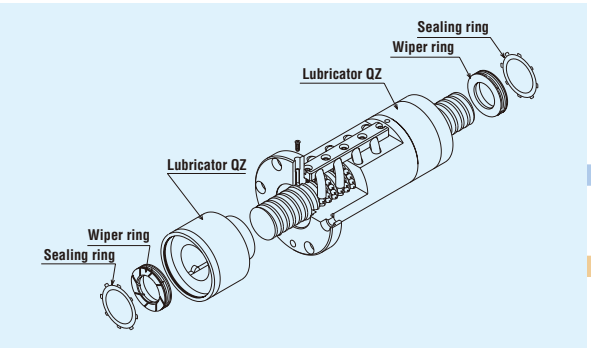

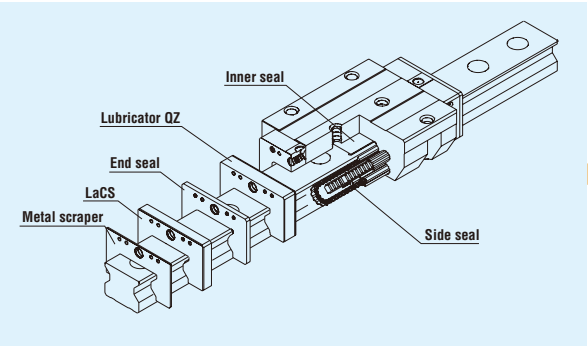

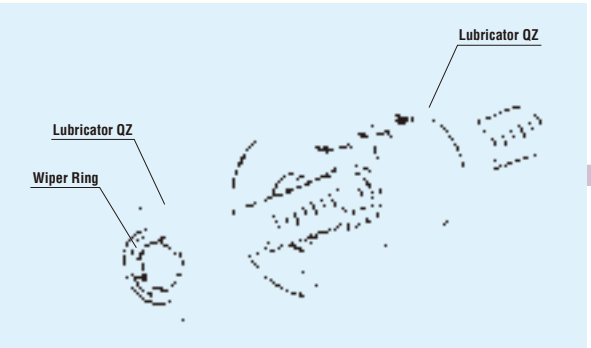

Application 1 Highly Rigid Structures

Welding machines (servo gun)
Laser machining systems
Punching presses
Graphite machining systems
Woodworking machines
Machining centers
NC lathes
High-rigidity machine tools

Application 2 Ultra-Highly Rigid Structures

Ultra-high-rigidity machine tools
High-precision machining centers
High-precision NC lathes
Jig borers
Five-axis processing machines

Application 3 High-speed Movement

Welding machines (servo gun)
Laser machining systems
Punching presses
Graphite machining systems
Woodworking machines
High-speed machining centers
High-speed NC lathes

Performance of the LM Guide Lubricator QZ

1) Significant Extension of Maintenance Intervals

Installation of the Lubricator QZ is effective for extending maintenance intervals over all load ranges from light loads to heavy loads.

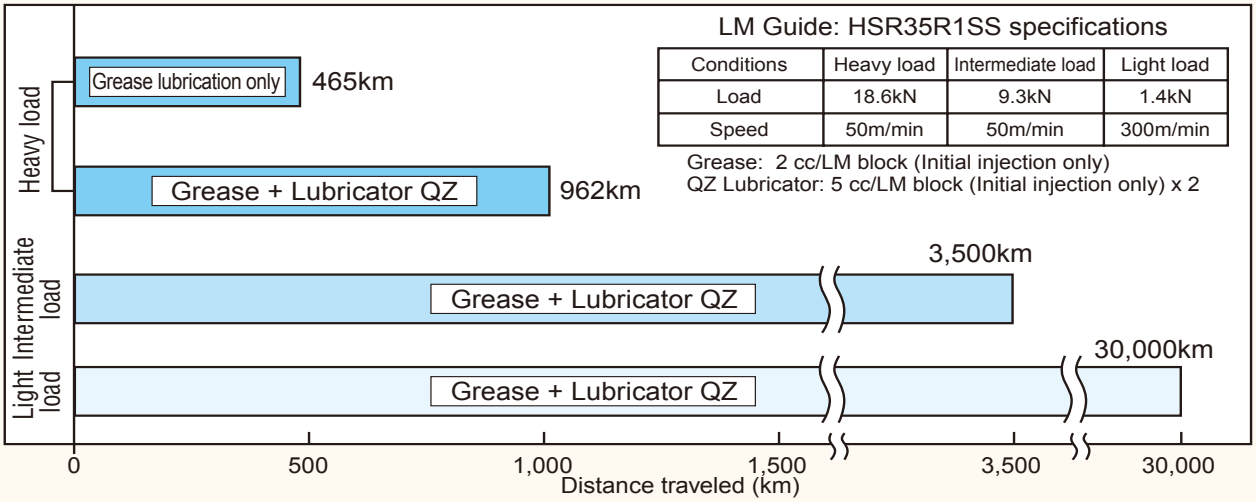

LM Guide: HSR35R1SS specifications

Conditions	Heavy load	Intermediate load	Light load
Load	18.6kN	9.3kN	1.4kN
Speed	50m/min	50m/min	300m/min

Grease: 2 cc/LM block (Initial injection only)
QZ Lubricator: 5 cc/LM block (Initial injection only) x 2

Operation Test of LM Guide without Supplying Lubricant

2) Effective Utilization of Lubricating Oil

Since the Lubricator QZ provides a suitable amount of lubricating oil at suitable locations, lubricating oil can be used effectively without waste.

Comparison of amount of lubricating oil used after traveling 5,000 km

Test conditions: 300m/min

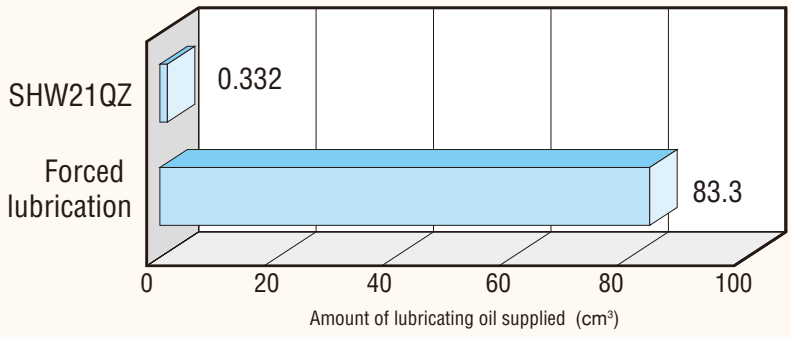

Oil content of Lubricator QZ
0.166cm³ x 2 = 0.332cm³

Comparison

Forced lubrication
0.03cm³/6 min x 16667 min = 83.3cm³

The amount of lubricating oil used was 1/250th that of forced lubrication.

3) Effective in Helping Lubrication under Severe Environments

A 5,000 km durability test was conducted under severe environments (containing coolant and contaminated environment).

[Test conditions]

Model No.	① Caged Ball LM Guide #45	② Full-ball LM Guide #45
Load	8kN	6kN
Speed	60m/min	
Coolant	Immersed 48 hrs, dried 96 hrs	
Foreign material	Foundry dust (125 μm or less)	
Lubrication	AFA Grease + QZ	Super Multi 68 Oiling cycle: 0.1cc/shot Periodically lubricated every 16 min

[Test result]

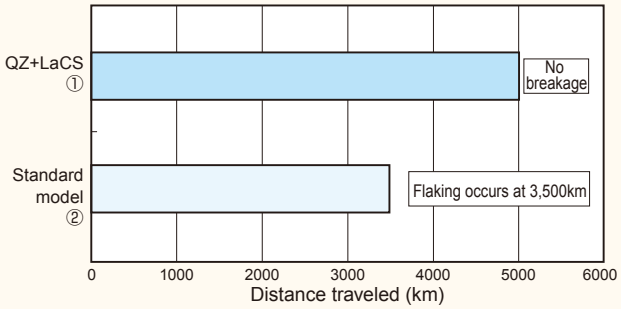

* When using the LM system under severe environment, use QZ Lubricator and Laminated Contact Scraper LaCS (see page 8) in combination.

Performance of the LM Guide Laminated Contact Scraper LaCS

1) Testing in Water-Soluble Coolant Environment

【Test Conditions】

Item		Description
Sample	No.1	SHS45R1SS+3000L (end seals only)
	No.2	SHS45R1SSHH+3000L(LaCS installed on end seals)
Max. speed		200m／min
Environmental conditions		Coolant application cycle: 5 times/day

【Test Results】

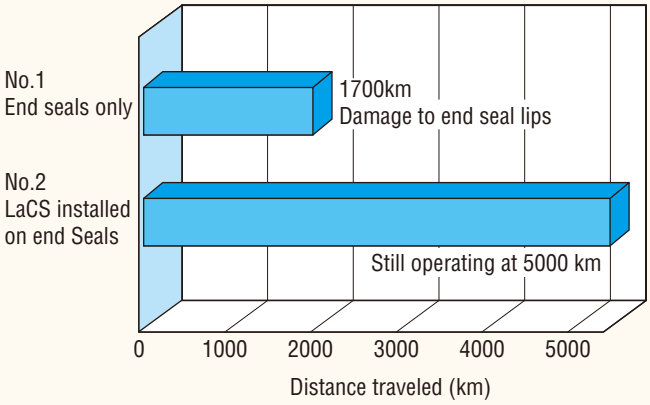

Enlarged Photograph of End Seal Lip

No.1：End seals only: Damaged lip at 1700 km

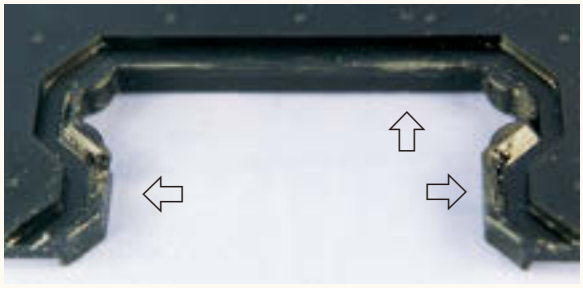

Arrows indicated damaged areas

No.2：LaCS installed on end seals: No abnormalities after traveling 5000 km

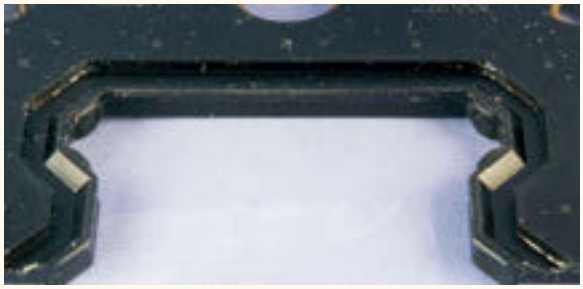

No damage to the lip

2) Test under an Environment with Minute Foreign Matter

【Test conditions】Test environment: minute foreign material

Item		Description
Tested model	No.1	Caged Ball LM Guide #45R (DD+600L) double seals only
	No.2	Caged Ball LM Guide #45R (HH+600L) LaCS only
Max speed/ acceleration		60m/min, 1G
External load		9.6kN
Foreign material conditions		Type: FCD450#115 (particle diameter: 125μm or less)
		Sprayed amount: 1g/1hour (total sprayed amount: 120 g)

【Test result】Amount of foreign material entering the raceway

Seal configuration		Amount of foreign material entering the raceway g
Double-seal configuration (2 end seals superposed with each other)	Tested model 1	0.3
	Tested model 2	0.3
	Tested model 3	0.3
LaCS	Tested model 1	0
	Tested model 2	0
	Tested model 3	0

No. 1　Traveled 100 km (double-seal configuration)

Large amount of foreign matter has entered the raceway

No. 2　Traveled 100 km (LaCS only)

No foreign matter entering the raceway observed

Performance of the Ball Screw Lubricator QZ

1) Significantly extended maintenance interval

Since QZ Lubricator continuously feeds a lubricant over a long period, the maintenance interval can be extended significantly.

QZ Lubricator only

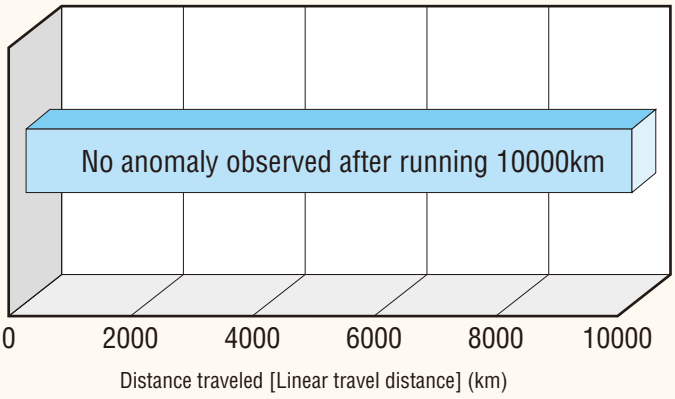

[Test conditions]

Item	Description
Ball Screw	BIF2510
Maximum rotational speed	2500min^{-1}
Maximum speed	25m/min
Stroke	500mm
Load	Internal preload only

2) Environmentally friendly lubrication system

Since QZ Lubricator feeds the right amount of lubricant directly to the raceway, the lubricant can effectively be used without waste.

QZ Lubricator

Forced lubrication

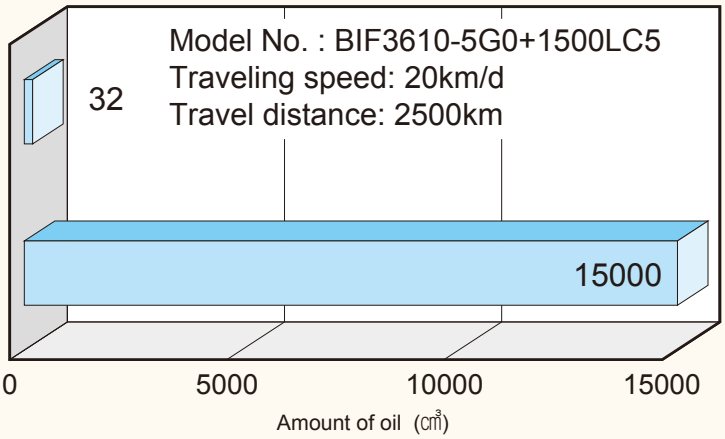

QZ Lubricator + THK AFA Grease

32cm³

(QZ Lubricator attached to both ends of the ball screw nut)

Compared

Forced lubrication

0.25cm³/3min × 24h × 125d

= 15000cm³

Reduced to approx. $\frac{1}{470}$

Performance of the Ball Screw Wiper Ring W

1) Testing in a Foreign Matter Environment

[Test Conditions]

Item	Description
Type	BIF3210—5G0+1500LC5
Max. rotational speed	1,000min^{-1}
Max. speed	10m/min
Max. peripheral speed	1.8m/s
Time constant	60ms
Dwell	1s
Stroke	900mm
Load (by internal pre-loading)	1.31kN
Grease	AFG Grease 8cm^3 initial charging into ball screw nut only
Cast powder	FCD400, mean particle size: 250μm
Amount of foreign matter per shaft	5g/h

[Test Results]

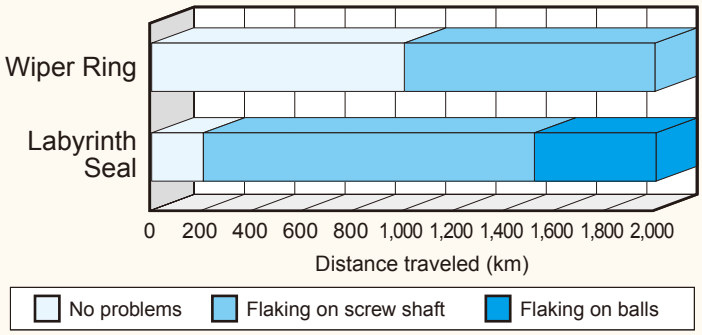

(1) Wiper Ring Specifications
Slight flaking occurred on the ball screw after traveling 1,000 km.
(2) Labyrinth Seal Specifications
Flaking occurred over all screw shaft rolling channels after traveling 200 km, and flaking occurred on the balls after traveling 1,500 km.

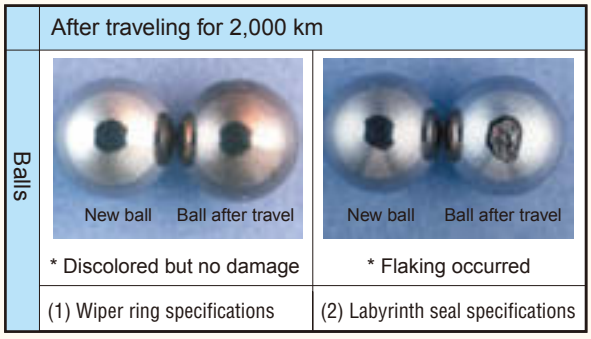

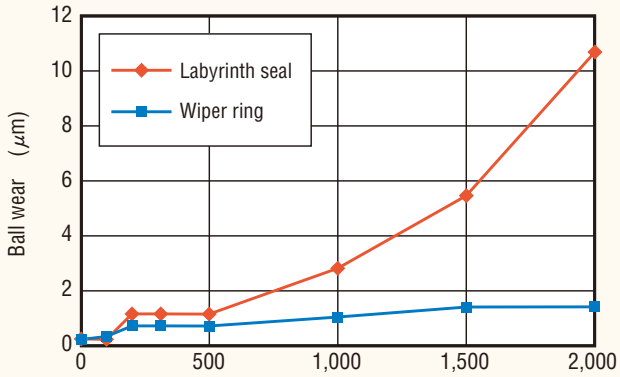

(1) Wiper Ring Specifications
The amount of ball wear was 1.4 μm after traveling 2,000 km.
(2) Labyrinth Seal Specifications
Wear proceeded rapidly starting at 500 km, and the amount of ball wear was 11 μm after traveling 2,000 km.

2) Heat Generation Test

[Test Conditions]

Item	Description
Type	BLK3232DG0+1426LC5
Max. rotational speed	1,000min^{-1}
Max. speed	32m/min
Max. peripheral speed	1.7m/s
Time constant	100ms
Stroke	1000mm
Load (by pre-loading only)	0.98kN
Grease	AFG Grease 5cm^3 (charged into ball screw nut)

[Test Results]

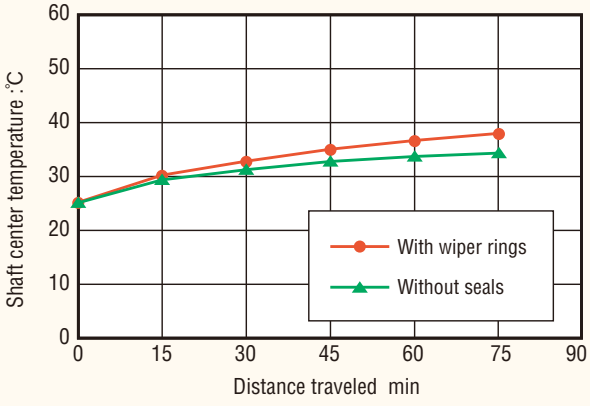

Units:℃

	With wiper rings	Without seals
Heat generation temperature	37.1	34.5
Temperature rise	12.2	8.9

● **"LM GUIDE" and "** **" are registered trademarks of THK CO., LTD.**

- The photo may differ slightly in appearance from the actual product.
- The appearance and specifications of the product are subject to change without notice. Contact THK before placing an order.
- Although great care has been taken in the production of this catalog, THK will not take any responsibility for damage resulting from typographical errors or omissions.
- For the export of our products or technologies and for the sale for exports, THK in principle complies with the foreign exchange law and the Foreign Exchange and Foreign Trade Control Law as well as other relevant laws.
  For export of THK products as single items, contact THK in advance.

All rights reserved

THK CO., LTD.

Head Office 3-11-6 Nishigotanda, Shinagawa-ku, Tokyo 141-8503 JAPAN
International Sales Department Phone:+81-3-5434-0351 Fax:+81-3-5434-0353
Global site : http://www.thk.com/

NORTH AMERICA
THK America,Inc.
●HEADQUARTERS
Phone:+1-847-310-1111 Fax:+1-847-310-1271
●CHICAGO OFFICE
Phone:+1-847-310-1111 Fax:+1-847-310-1182
●NORTH EAST OFFICE
Phone:+1-631-244-1565 Fax:+1-631-244-1565
●ATLANTA OFFICE
Phone:+1-770-840-7990 Fax:+1-770-840-7897
●LOS ANGELES OFFICE
Phone:+1-949-955-3145 Fax:+1-949-955-3149
●SAN FRANCISCO OFFICE
Phone:+1-925-455-8948 Fax:+1-925-455-8965
●DETROIT OFFICE
Phone:+1-248-858-9330 Fax:+1-248-858-9455
●TORONTO OFFICE
Phone:+1-905-820-7800 Fax:+1-905-820-7811

SOUTH AMERICA
THK BRAZIL INDUSTRIA E COMERCIO LTDA.
Phone:+55-11-3767-0100 Fax:+55-11-3767-0101

EUROPE
THK GmbH
●EUROPEAN HEADQUARTERS
Phone:+49-2102-7425-555 Fax:+49-2102-7425-556
●DÜSSELDORF OFFICE
Phone:+49-2102-7425-0 Fax:+49-2102-7425-299
●STUTTGART OFFICE
Phone:+49-7141-4988-500 Fax:+49-7141-4988-888
●U.K. OFFICE
Phone:+44-1384-47-1550 Fax:+44-1384-47-1551
●ITALY OFFICE
Phone:+39-02-9901-1801 Fax:+39-02-9901-1881
●SWEDEN OFFICE
Phone:+46-8-445-7630 Fax:+46-8-445-7639
●AUSTRIA OFFICE
Phone:+43-7229-51400 Fax:+43-7229-51400-79
●SPAIN OFFICE
Phone:+34-93-652-5740 Fax:+34-93-652-5746
●TURKEY OFFICE
Phone:+90-216-362-4050 Fax:+90-216-569-7150
●PRAGUE OFFICE
Phone:+420-2-41025-100 Fax:+420-2-41025-199
●MOSCOW OFFICE
Phone:+7-495-649-80-47 Fax:+7-495-649-80-44
THK Europe B.V.
●EINDHOVEN OFFICE
Phone:+31-040-290-9500 Fax:+31-040-290-9599
THK France S.A.S.
●PARIS OFFICE
Phone:+33-1-7425-3800 Fax:+33-1-7425-3799

CHINA
THK (CHINA) CO.,LTD.
●HEADQUARTERS
Phone:+86-411-8733-7111 Fax:+86-411-8733-7000
●SHANGHAI OFFICE
Phone:+86-21-6219-3000 Fax:+86-21-6219-9890
●BEIJING OFFICE
Phone:+86-10-8441-7277 Fax:+86-10-6590-3557
●CHENGDU OFFICE
Phone:+86-28-8526-8025 Fax:+86-28-8525-6357
●GUANGZHOU OFFICE
Phone:+86-20-8523-8418 Fax:+86-20-3801-0456
●SHENZHEN OFFICE
Phone:+86-755-2642-9587 Fax:+86-755-2642-9604
●XIAN OFFICE
Phone:+86-29-8834-1712 Fax:+86-29-8834-1710
THK (SHANGHAI) CO.,LTD.
Phone:+86-21-6275-5280 Fax:+86-21-6219-9890

TAIWAN
THK TAIWAN CO.,LTD.
●TAIPEI HEAD OFFICE
Phone:+886-2-2888-3818 Fax:+886-2-2888-3819
●TAICHUNG OFFICE
Phone:+886-4-2359-1505 Fax:+886-4-2359-1506
●TAINAN OFFICE
Phone:+886-6-289-7668 Fax:+886-6-289-7669

KOREA
SEOUL REPRESENTATIVE OFFICE
Phone:+82-2-3468-4351 Fax:+82-2-3468-4353

SINGAPORE
THK LM System Pte. Ltd.
Phone:+65-6884-5500 Fax:+65-6884-5550

THAILAND
THK RHYTHM(THAILAND) CO., LTD. LM System Division
●Bangkok Branch
Phone:+66-2751-3001 Fax:+66-2751-3003

INDIA
THK India Pvt. Ltd.
●HEADQUARTERS & Bangalore Branch
Phone:+91-80-2340-9934 Fax:+91-80-2340-9937
●Pune Branch
Phone:+91-20-4120-8742
●Chennai Branch
Phone:+91-44-4042-3132
●Ahmedabad Branch
Phone:+91-79-6134-4925
●Delhi Branch
Phone:+91-12-4676-8695

©THK CO., LTD.
201511010 E27 Printed in Japan